NOTRE DAME UNIVERSITY BANGLADESH

Lab Project Report

Course title : **Digital System Design**

Course code : **CSE 4106**

Submitted by ,

Group 11

Name : Md. Hemal Ahmed. _ **ID :** 0692230005101013

Name : Prima Saha. _ **ID :** 0692230005101014

Name : Md. Rasin Hasan Shad. _ **ID :** 0692230005101015

Batch : CSE 20

Department of Computer Science & Engineering.

Submitted to ,

Afsana Sharmin Shanta

Lecturer, NDUB

Department of Computer Science & Engineering

Submission date :

Tables :

S0	S1	S2	Cin	x	y	Functions
0	**0**	**0**	**0**	**A**	**B**	Addition, **B+A**
0	**0**	**0**	**1**	**A**	**B**	Add with carry, **B+A+1**
0	**0**	**1**	**0**	**All 1**	**B**	Decrement B, **B-1**
0	**1**	**0**	**0**	**0**	**B**	Transfer B, **B**
1	**0**	**0**	**X**	**A**	**B**	Exclusive-OR, **A XOR B =** $A \oplus B$
1	**0**	**1**	**X**	**1**	**A+B**	NOR, **A NOR B =** $\overline{A + B}$

Equations :

$$\mathbf{y} = B + S2\,\overline{S1}\,S0\,(A+B)$$

$$= B + S2\,\overline{S1}\,S0\,A + S2\,\overline{S1}\,S0\,B$$

$$= B\,(1 + S2\,\overline{S1}\,S0) + S2\,\overline{S1}\,S0\,A$$

$$= B + S2\,\overline{S1}\,S0\,A$$

$\mathbf{x} = \overline{S1}\,\overline{S0}\,A + \overline{S1}\,S0$

$\mathbf{z} = \overline{S2}\,Cin$

Total number of gates :

AND gate : 14

OR gate : 10

NOT gate : 4

:. Total number of 28 gates we used.
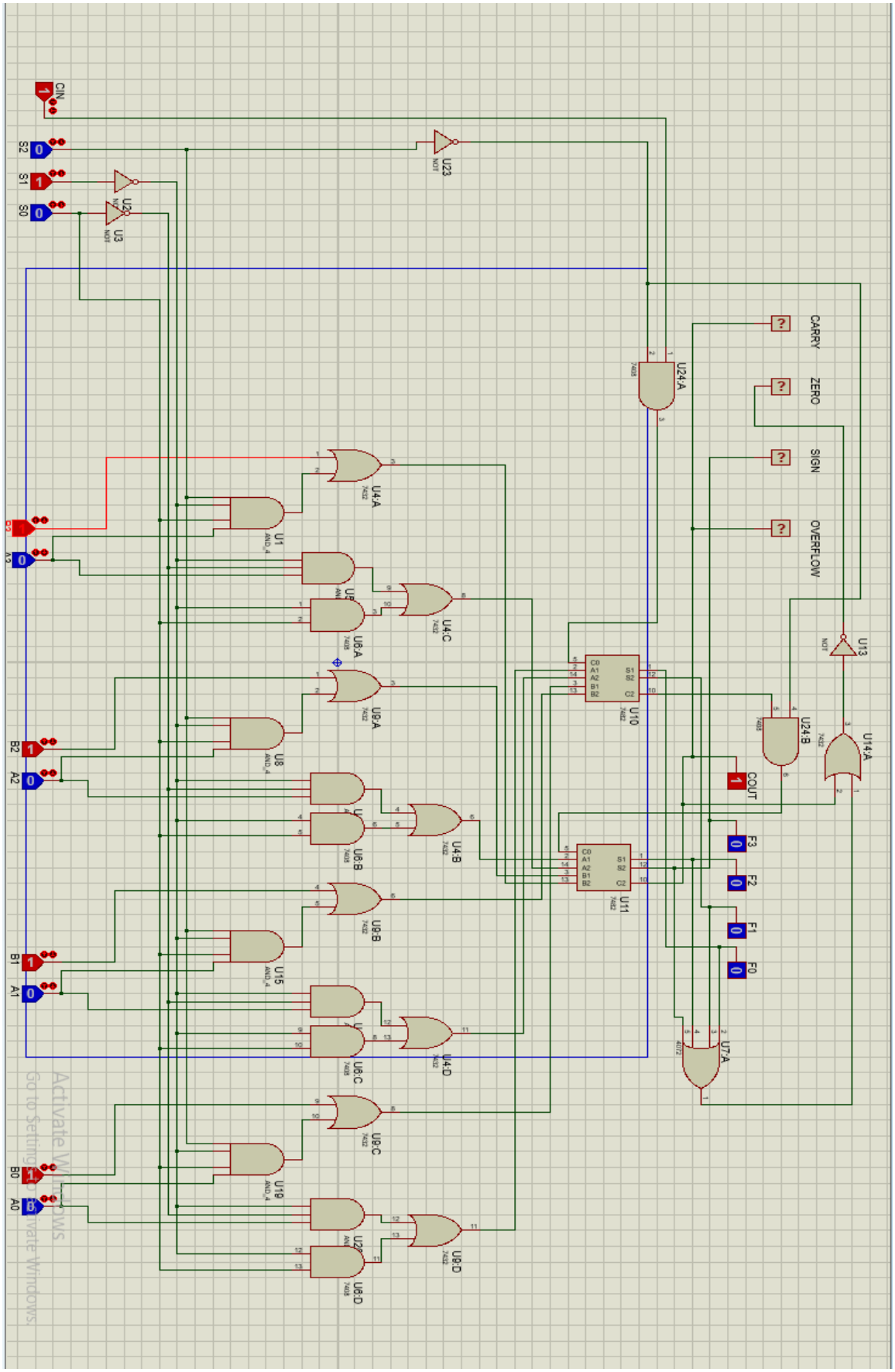
Circuit diagram :